Ascon Tecnologic S.r.l.
via Indipendenza 56,
27029 - Vigevano (PV)
Tel.: +39 0381 69871,
Fax: +39 0381 698730

FUZZY Universal Controller with total configuration 48x96 DIN, **XF** Series

CE

INSTRUCTION MANUAL

MIU.XF- 2/96.10/E

COD J30-154-1AXF ING

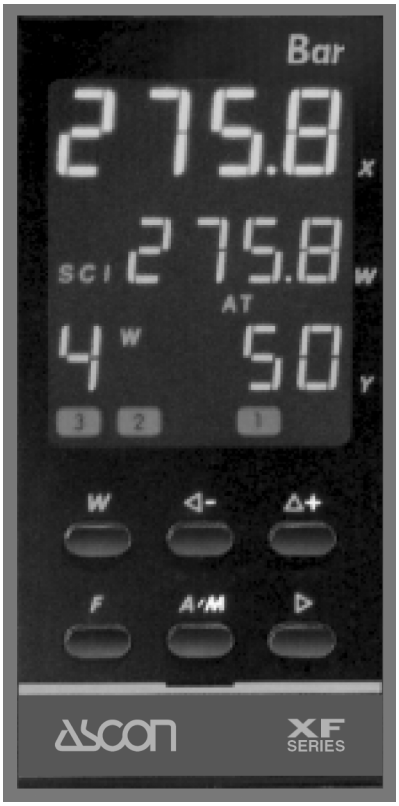

Ascon Tecnologic Srl

www.ascontecnologic.com

GENERAL INDEX

1 • IDENTIFICATION OF MODEL

Thank you for choosing an ASCON controller

The instruments of the XF series belong to the last generation of microprocessor based controller, are universal, very powerful but simple to use.
They are fitted with AUTO-TUNE , an auxiliary for system start-up, and serial communication for introduction into a distributed control network.
They are complete because all possible variables are always present.
Configuration of the instrument permits determination of the operating mode according to the application required.

1.1 Identification of model

Model code

XF -A B C 0 /

Configuration code

Beginning and end of scale

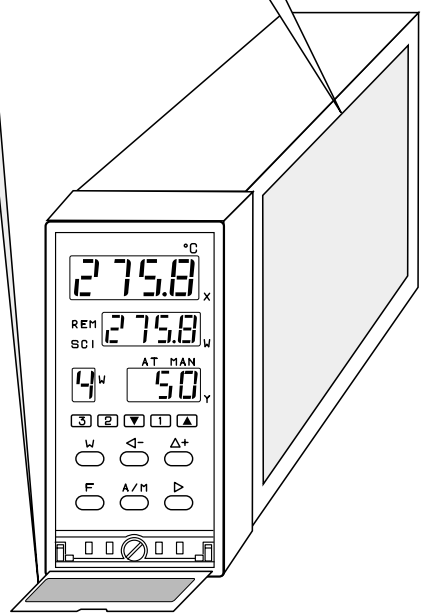

	Power supply	**A**
	100 …240 V 50/60 Hz	**3**
	16 …28 V 50/60 Hz and 20…30 Vdc	**5**
OPTIONS	**Serial communications**	**B**
	None	**0**
	20mA C.L Std Ascon protocol	**1**
	20mA C.L. Modbus/Jbus protocol	**2**
	RS485 port Modbus/Jbus protocol	**3**
	Retransmission output Y4	**C**
	None	**0**
	Fitted (4...20 mA or 0...10 Vdc)	**1**

1.2 Configuration code

Configuration code

E F G H - I L M N /

Beginning and end of scale **O . . . . P**

Model code

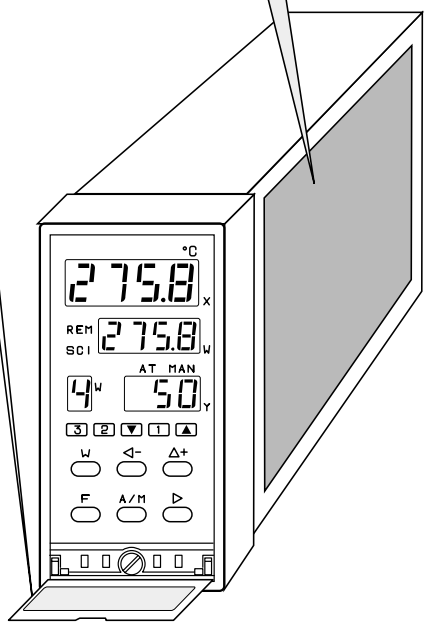

1st part	Input X	E F
	Main output Y1	G H
2nd part	Auxiliary output Y2	I
	Auxiliary output Y3	L
	Retransmission output Y4	M
	Set point W	N
	Beginning and end of scale (for configurable scales only)	O P

The controller is normally configured in the factory.

If this appears on starting

the controller **IS NOT CONFIGURED**

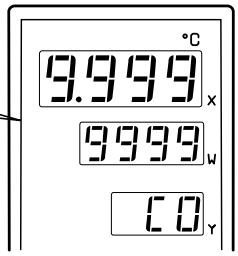

In order to configure the controller, follow the configuration procedure reported in the enclosed leaflet

2 • FUNCTION OF KEYS AND DISPLAYS

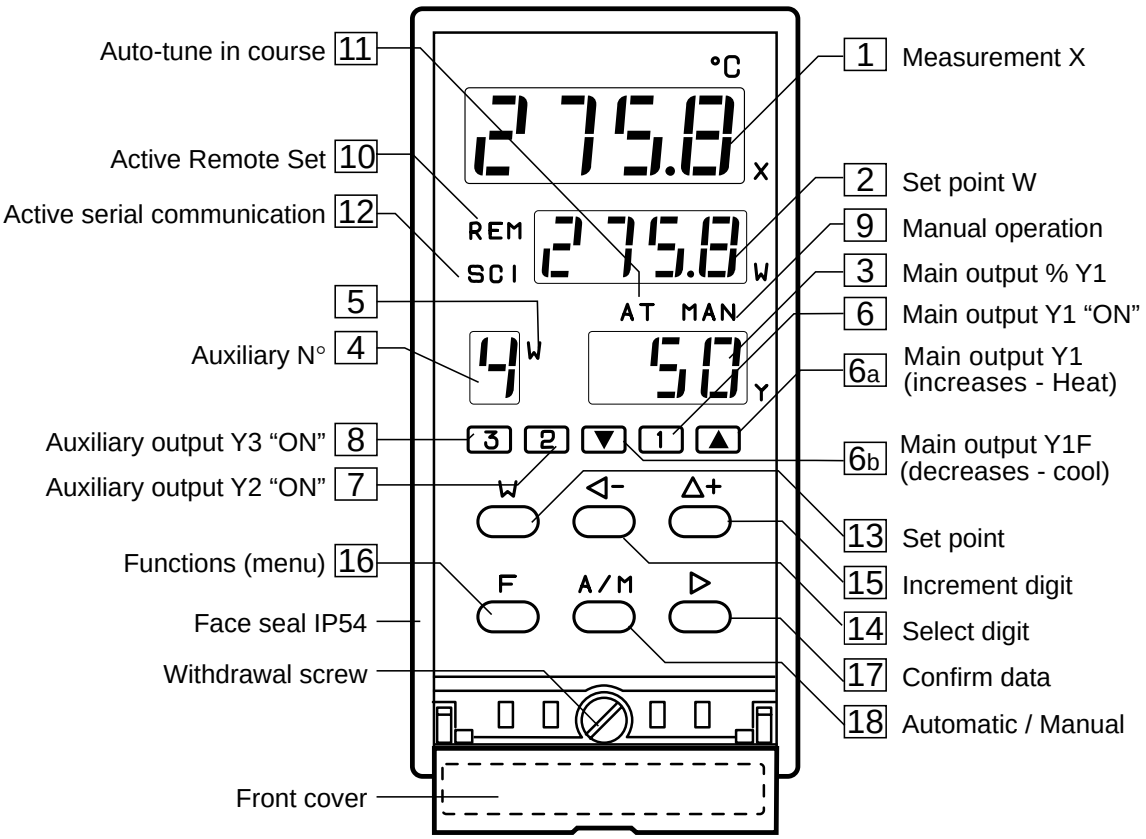

NUMERIC INDICATORS X, W, Y, N°	
1 - Measure X (green) 10 275.8 X	The value of measure X is expressed in engineering units. If above end of scale 8888 If below beginning of scale 8888 - In programmation: displays parameter values - In configuration: displays the values of the 1st part of the configuration code (see enclosed leaflet)
2 - Set point W (green) 7.5 275.8 W	Displays the operating Set point value (Local or Remote) - In programmation: displays the parameter codes - In configuration: displays the index values of the 2nd part of the configuration code (see enclosed leaflet)
3 - Output Y1 (green) 7.5 50 Y	Displays the value of main output Y1 from 0...100% (from - 100 to 100% for Y1 with dual action) - In configuration: Displays the mnemonic code Co
4 - Auxiliary N° (green) 7.5 4 W	Normally off, lights up to display the selected N° of 1 of the 4 stored Set points , in which case led 5 "W" lights up too

LEDS FOR OUTPUT STATE		
6 - Output Y1 (red) 1	Light with output Y1 “ON” De-activated with continuous or dual action discontinuous output	
6a - Output Y1 (red) ▲	Light with output	Y1 "ON" (increasing servomotor position) Y1 (heat) "ON" - dual action
6b - Output Y1F (red) ▼	Light with output	Y1 "ON" (decreasing servomotor position) Y1 (cool) "ON" - dual action
7 - Output Y2 (red) 2	Light with output Y2 “ON”	
8 - Output Y3 (red) 3	Light with output Y3 “ON”	

LEDS FOR OPERATING STATE	
9 - Manual (green) ***MAN***	Light in Manual operation
10 - Remote (green) ***REM***	Light when the Remote Set point is operating (if off, the operating Set point is the Local one)
11 - Auto-Tune (green) ***AT***	Light when Auto-Tune is AT in course
12 - Serial comm. (green) ***SCI***	Permanently light when the serial communication is enabled to write. Flashes with signal in transit
Loop - Break - Alarm 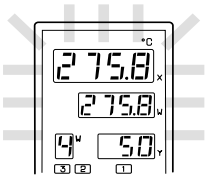	With output Y3 active and configured as Loop Break Alarm, the front displays X and W are flashing (see p. 15)

KEYS		
13 - Set Point W	configuration: 1 Local used for: • modifying the Local Set point 1 Local + 1 Remote used for: • modifying the Local Set point • passing from Local to Remote Set point and viceversa (see enclosed leaflet) 1 Local + 4 storable used for: • modifying the Local Set point • to recall the Local operating Set point • recalling the 4 memorized Set points (see enclosed leaflet)	
14 - Digit selection ◁−	Selects the digit to be modified (see enclosed leaflet) In Manual operation, decrements the value of main output Y1	**Keys for modifying numeric values of any data**
15 - Increment digit Δ+	Increments the value of the flashing digit, from 0…9 In manual operation increments the value of main output Y1	
16 - Functions F	Permits access to menu of functions to be programmed	**Keys for data programming and processing**
17 - Enter ▷	Enter or Scroll of values and modes of operation	
18 - Auto/Man A/M	Passage from Automatic to Manual operation and viceversa	

3.1 - Overall dimensions (in compliance with DIN 43700)

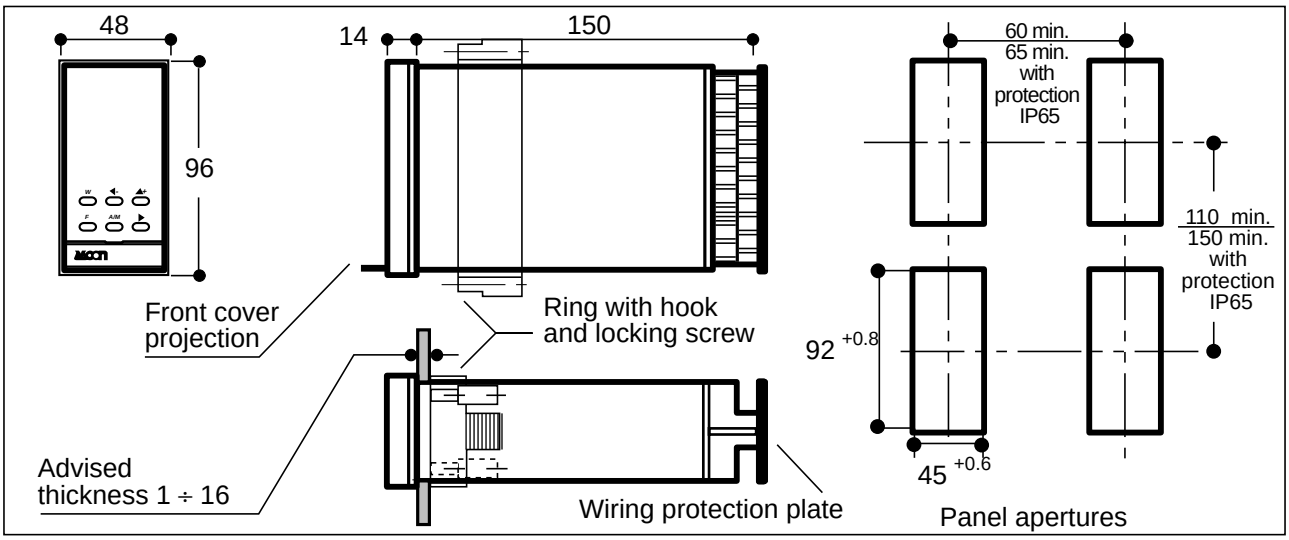

3.2 - Panel installation

A • Panel fitting

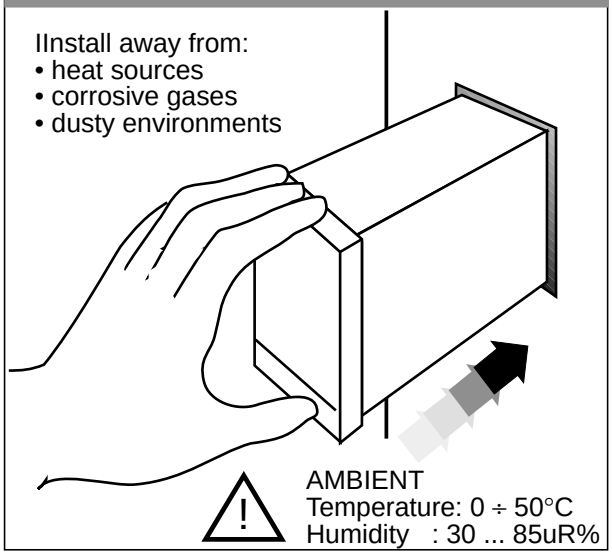

B • Fixing with ring

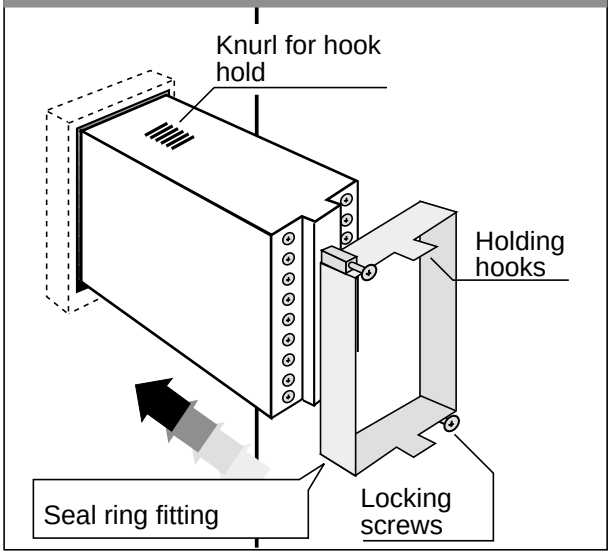

C • Screw locking

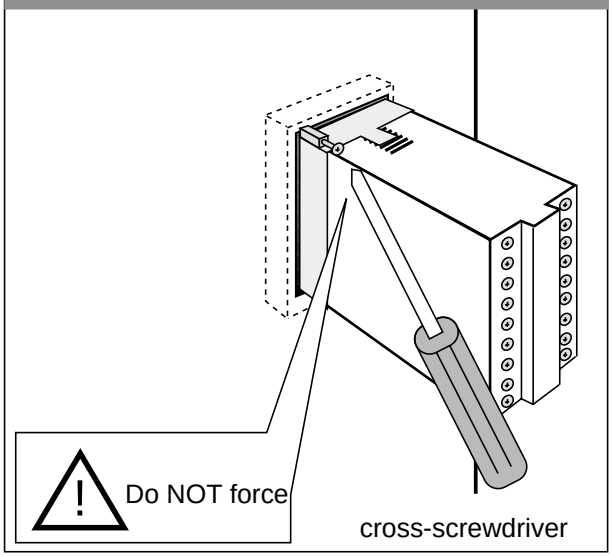

D • Plate for engineering units

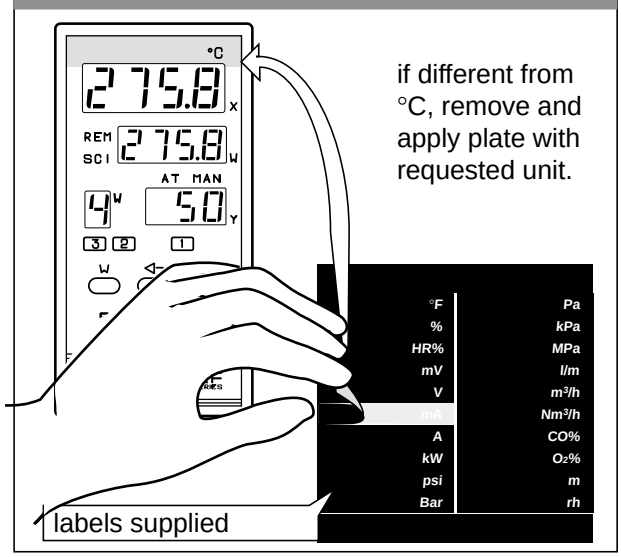

4 • ELECTRICAL WIRING

A • Terminal board

28 screw terminals M3.5

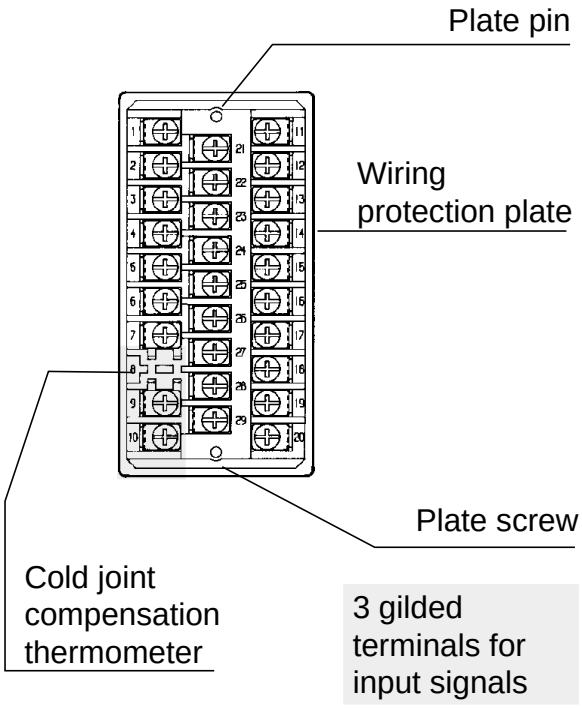

B • Freeing the terminals

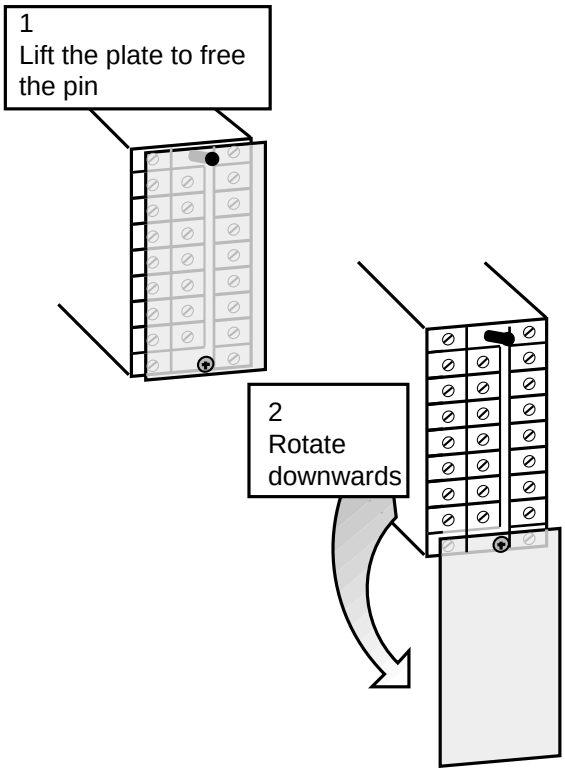

C • Effecting the connections

	Cable section	wires N°
With eyelet terminals 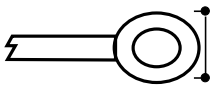 6.9 max.	0.25 ÷ 2.5 AWG 22 ÷ 14	2
With fork terminals 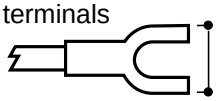 6.9 max.		1
With tinned wire 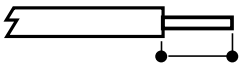 6 ÷ 7		2
Preferential		

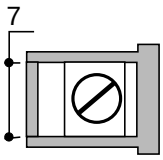

D • Protecting the terminal board

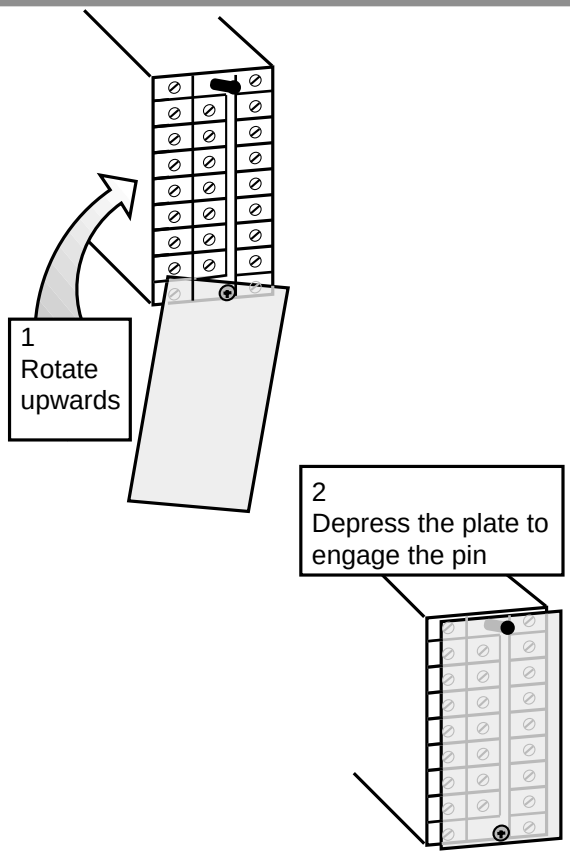

4 • ELECTRICAL WIRING

Although this controller is designed to resist the heaviest disturbances present in industrial environments (level IV of standard (IEC 801-4), it is advised to keep to the following precautions:

Precautions

Single out supply line from power line

Keep away from teleruptors, electromagnetic contactors and powerful motors

Keep away from power groups, in particular if with phase control

Advised conductor course

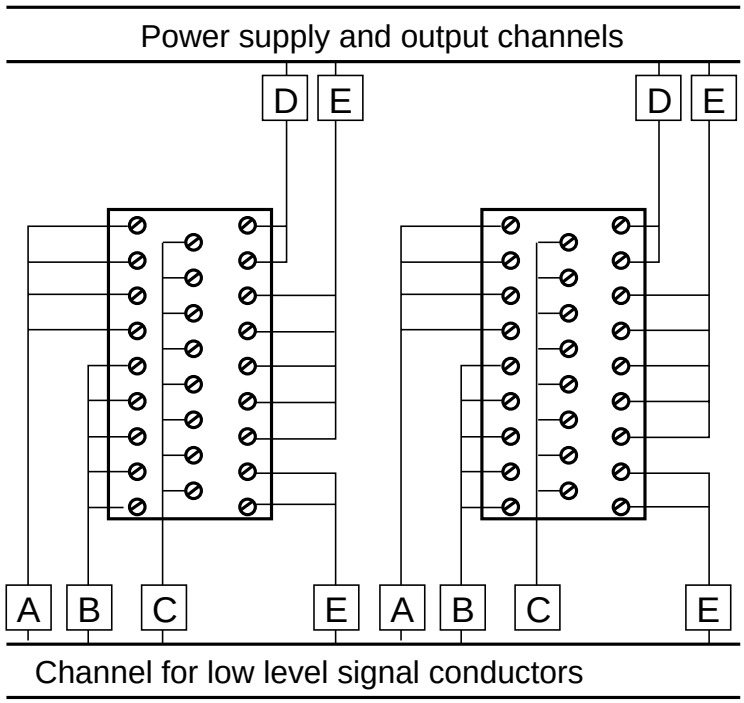

Serial communication A

Analogic inputs B

Logic inputs and analogic signals C

Input D

Outputs E

Wiring diagram

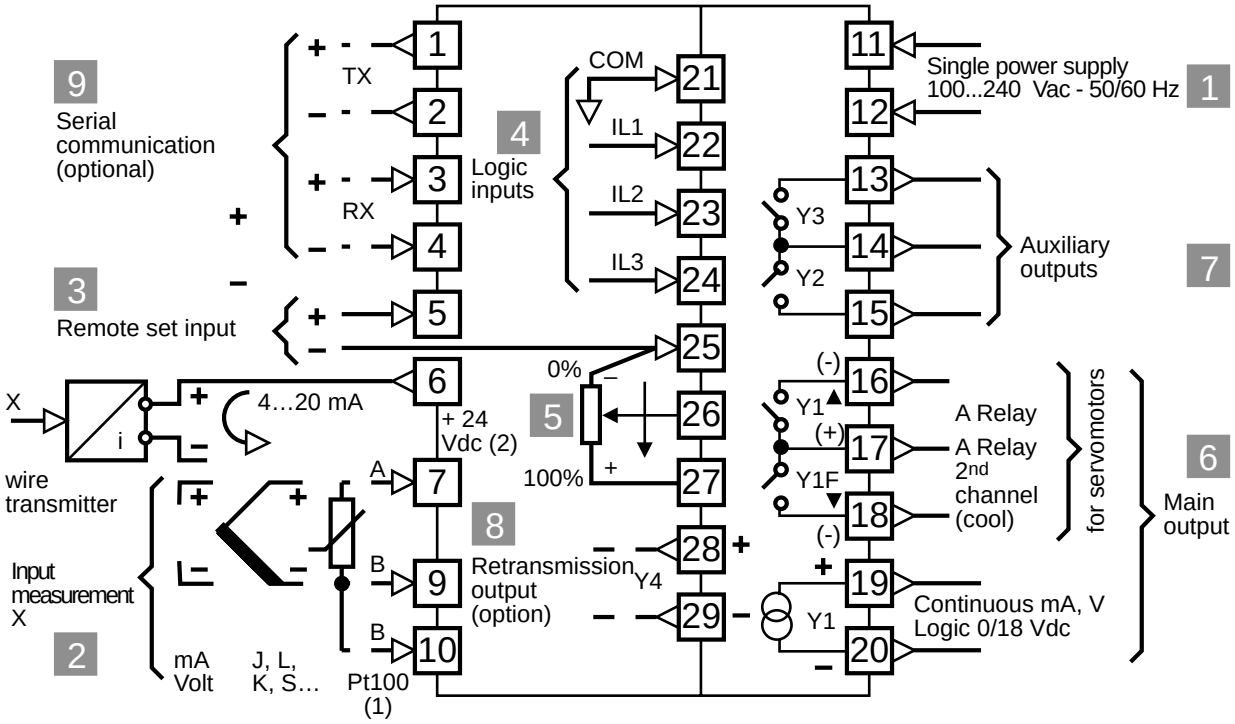

4 • ELECTRICAL WIRING

1 • Single power supply

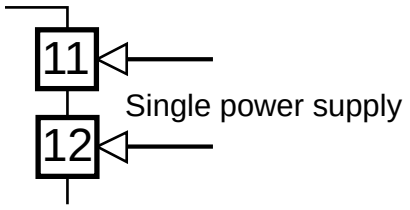

"Switching" type
- Standard: 100 to 240 Vac - 15% + 10%
  250 Vac max.
- for low tension: 24 Vac -15% + 10%
  24 Vdc ±15%

Absorbed power 4VA

2 • "X" measurement input

A - For thermocouples J-L-K-S-R

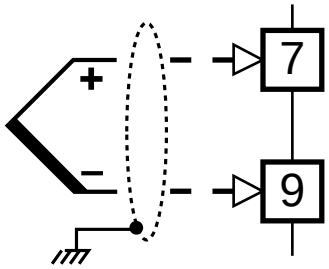

Line: max. 150 Ω

- Respect polarities
- For eventual extensions, use a compensated cable suitable for the type of thermocouple used
- The eventual screen is well earthed at only one end

B - For RTD Pt100

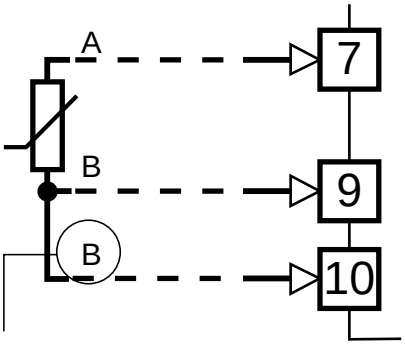

for 3-wire connection only
Line: 20 Ω max. for wire

- For 3-wire connection, use cables of same section (min. 1 sq.mm)
- For 2-wire connection, use cables of adequate section (min. 1.5 sq.mm.)

Note:
with a 15 m. probe-controller distance and a 1.5 sq.mm. section cable, the error is about 1°C.

C • Continuous, mA, Volt

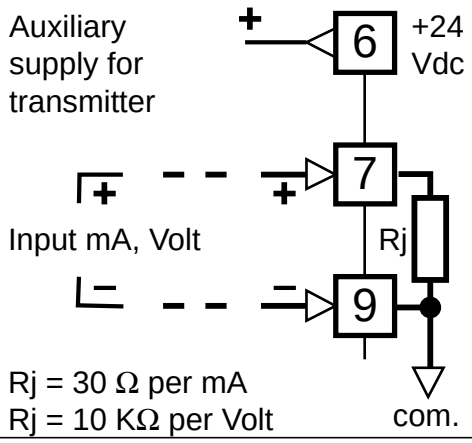

Rj = 30 Ω per mA
Rj = 10 KΩ per Volt

For 2-wire transmitter

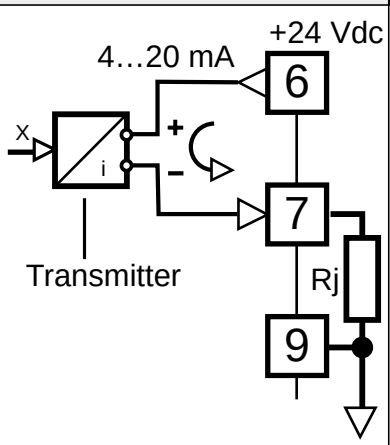

For 3 or 4-wire transmitter

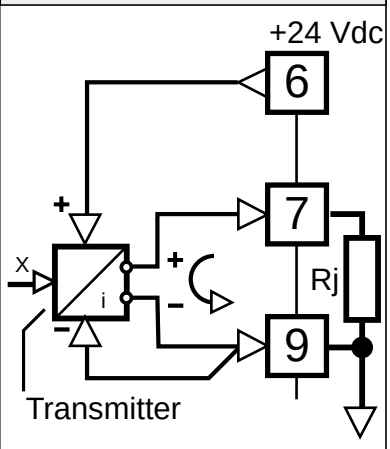

3 • Remote Set point input

Rin = 30 Ω per mA
Rin = 330 KΩ per V

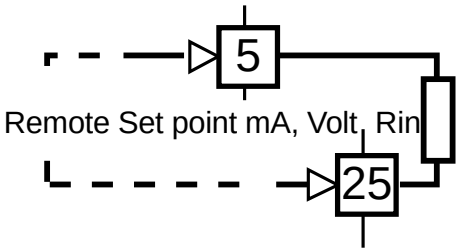

In current 4..20 mA

In voltage 0..10Vdc

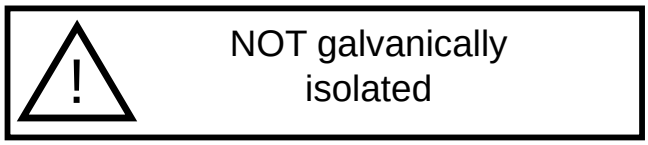

4 • Logic inputs

External contacts

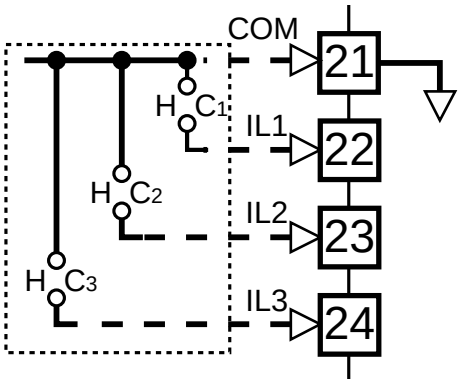

An impulsive (2 sec. at least) closing of contacts C1, C2, C3, permits the selection AUTO or MAN, Local or Remote Set point and recalling the 4 memorized Set points

5 • Input potentiometer position (servomotors)

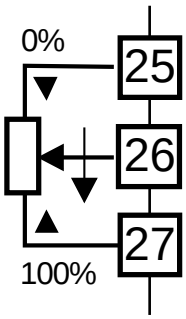

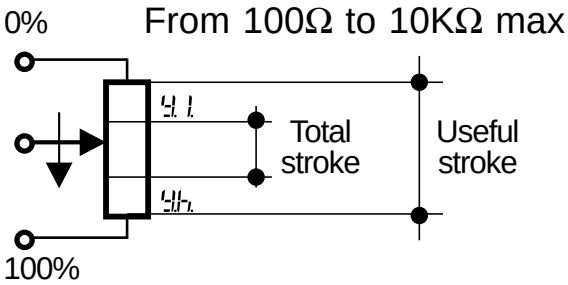

See calibration procedure on the enclosed sheet

6 • Main output Y1

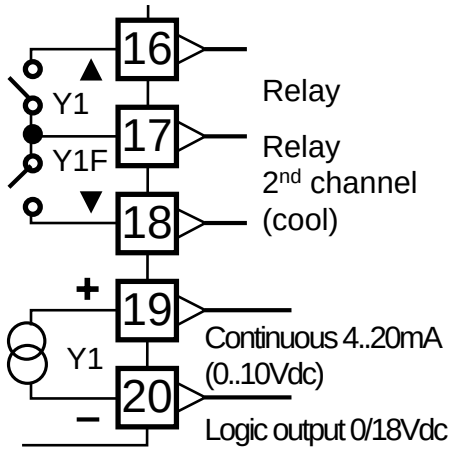

Universal and galvanically isolated. 2 relays are simultaneously present for discontinuous output with single or dual action (HEAT:COOL), or for the floating output with 3 positions for servomotors and the signal for standard continuous output 4..20mA (or 0..10Vdc) which can also be Logic output 0/18Vdc).

A • Single with Relay

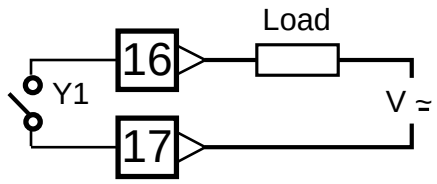

NA contact, capacity 5A/250Vac for resistive loads (transition 2 x 10 (coeff.5) min. at 5A/250Vac)

B • single in current

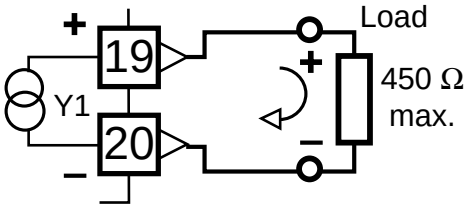

Continuous output 4..20mA galvanically isolated

C • single in voltage

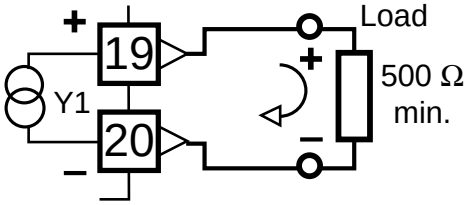

Continuous output 0..10Vdc galvanically isolated

D • single logic

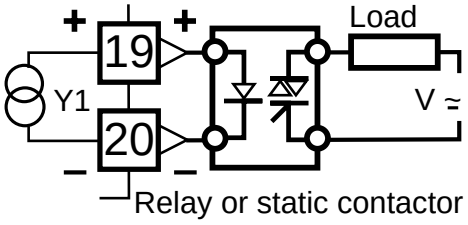

Output 0/18Vdc (20mA max.) galvanically isolated

Position the switch set inside the controller too

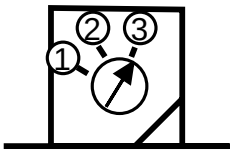

① Continuous output 4...20mA Standard
② Continuous output 0...10Vdc
③ Logic output 0...18Vdc

6 • Main output Y1 (continued)

E • Dual action for servomotors

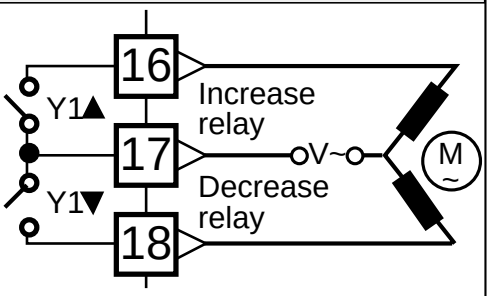

Three positions two interlocked NO contacts (Increase stop Decrease) 5A/250 Vac for resistive loads (transition 2 x 10^5 min. at 5A/250 Vac)

F • Dual action relay

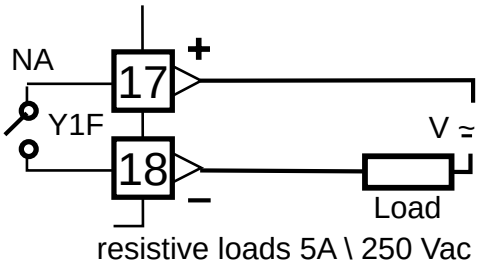

resistive loads 5A \ 250 Vac

For controllers with dual action output Y1 (example: Heat-Cool), an extra output Y1F with Relay is available for the cooling action. If a continuous output is desired for cooling, use the retransmission output Y4 (option) configured for retransmission of the signal: Y1F (cool).
Possible combinations for Y1 dual are:

Terminals	16 - 17		19 - 20				16-17	19 - 20	
Y1 ▲ (Heat)	R	R	L	L	C	C	R	C	L
Y1 ▼ (Cool)	R	L*	R	L*	L*	R	C	C	C
Terminals	17 - 18						28 - 29		

where: R = Relay L = Logic C = continuous (mA or Volt)
*version on request

G • Continuous dual action

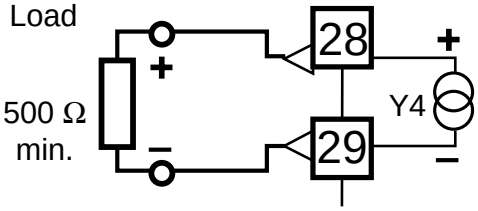

Retransmission output Y1F (option)

galvanically isolated
4...20mA, 10Vdc max. or
0...10Vdc, 20mA max.

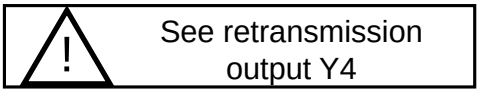

For Y1 cool, R is the extra relay of Y1, while C is the retransmission output Y4 configured to retransmit Y1 cool: 4...20mA or 0...10 Volt.

Output feature of dual action controllers

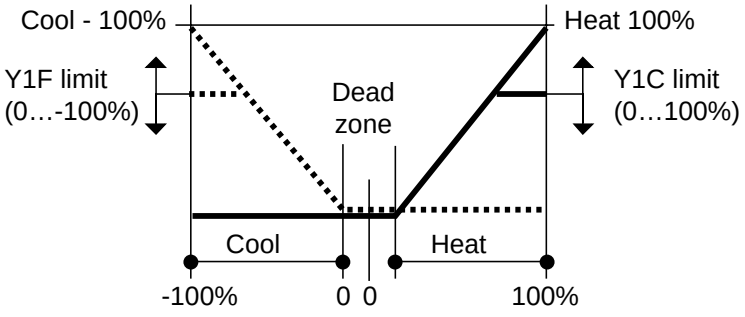

▪▪▪ Y1F = output cool

▬ Y1C = output heat

7 • Auxiliary outputs Y2 (see p. 14)

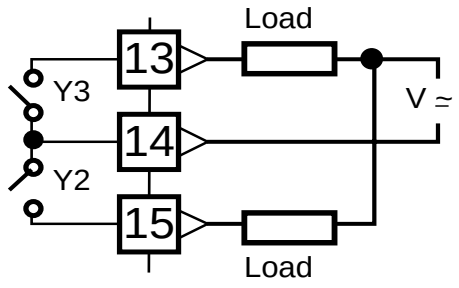

NA contacts, capacity 5A/250Vac for resistive loads (transitions 2x10 (coeff.5) min. at 5A/250Vac)

8 • Retransmission output Y4 (option)

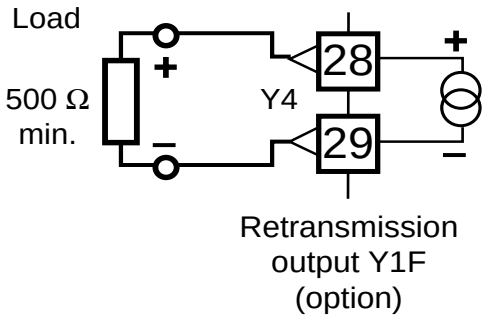

Retransmission:
of measurement X
of Set point W
of output Y1F (Cool)

Galvanically isolated
4..20mA, 10Vdc max. or
0..10Vdc, 20mA max.

4..20mA (standard)
change to 0..10V, moving a
JUMPER inside the controller

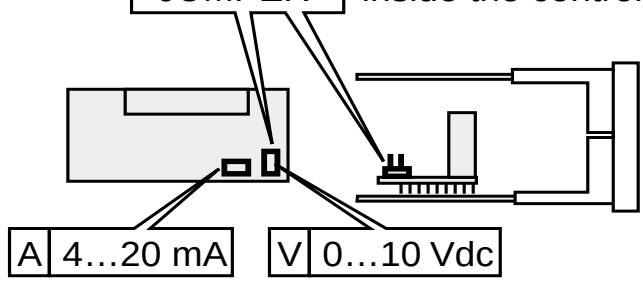

9 • Serial communication (option)

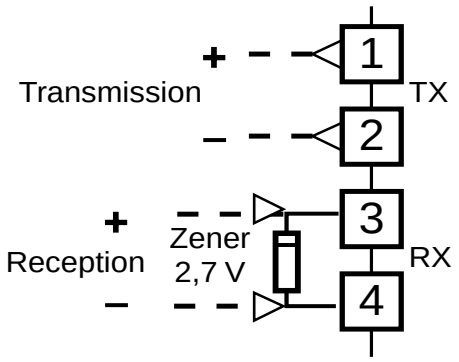

Note
Zener 2,7 V Only for 20mA C.L.

Interface 20mA C.L. passive and galvanically isolated or RS485 port

Consult Directions for use "SERIAL COMMUNICATION SUPPLEMENT" MIU-CS/E supplied separately.

Deviation 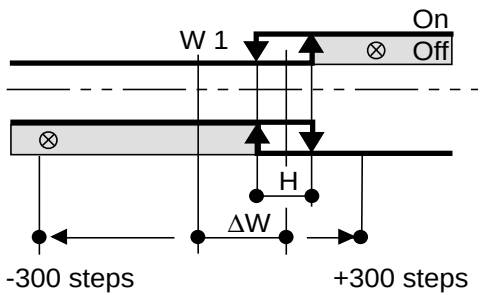 	Active high (above) Active low (under)	Set point ΔW (1) -300...+300 steps compared to W1
Band 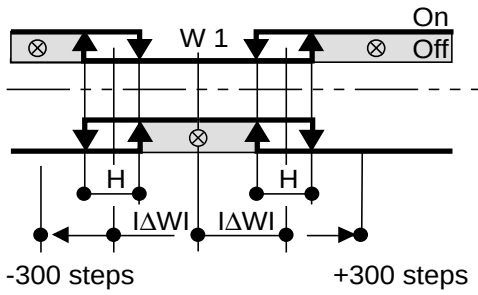 	Active out (above) Active in (under)	Set point IΔWI (1) -0...300 steps compared to W1
Independent 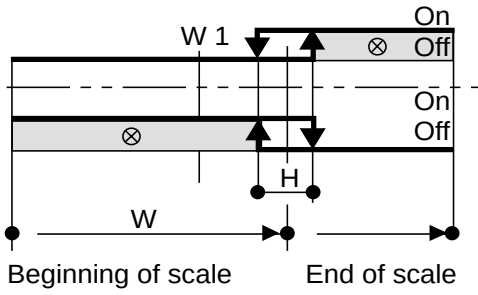 	Active high (above) Active low (under)	Set point (1): from beginning to end of scale

(1) - The Set point of Y2 and Y3 is not limited by the limits of the main Set point W1, but only by the scale span.

Deviation with startup inhibition 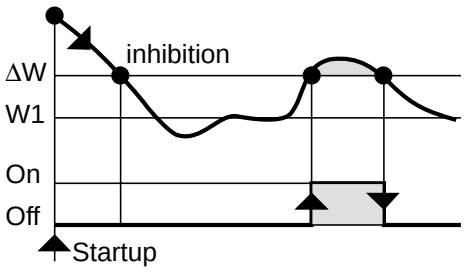 	Active high (above)	Set point ΔW (1) -300...+300 steps compared to W1
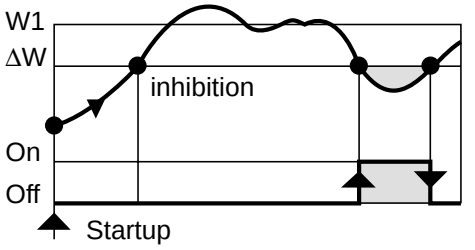 	Active low (under)	

“Loop-Break-Alarm” LBA (control loop defect/interruption)

Any interruption in the connections or any anomaly in the operation of one of the control loop components, will cause the output Y3 to be energized after a few minutes and front display X and W will be flashing.
The alarm state will stop when the anomaly causing it stops or

depressing any key for silencing it.

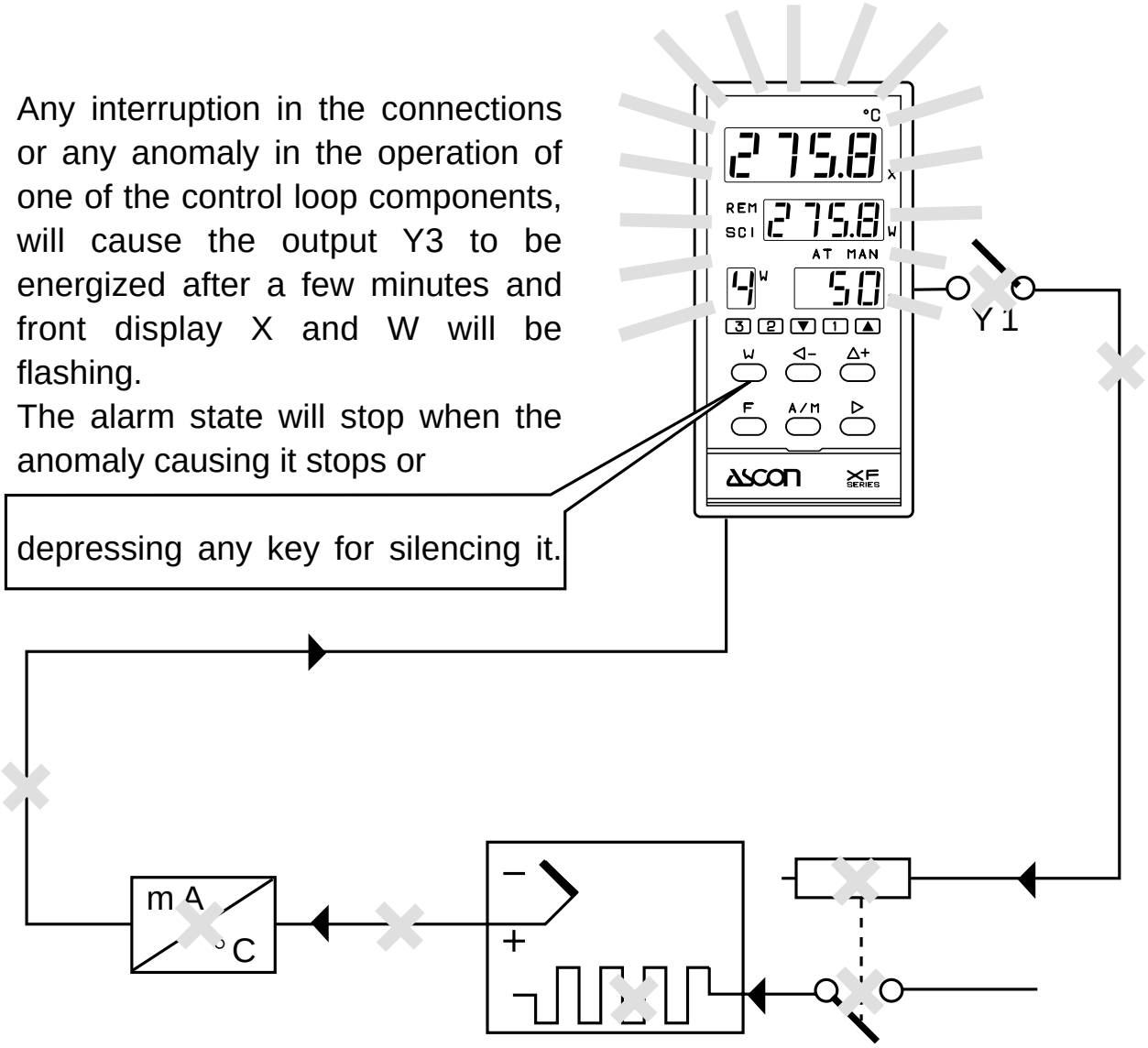

With ON - OFF action "LBA" feature is not available

6 • PASSWORD

In order to prevent tampering or inadvertent alterations of the configuration or of some important parameters at the programming stage, 2 passwords have to be entered.

6.1 Password of access to configuration 3333

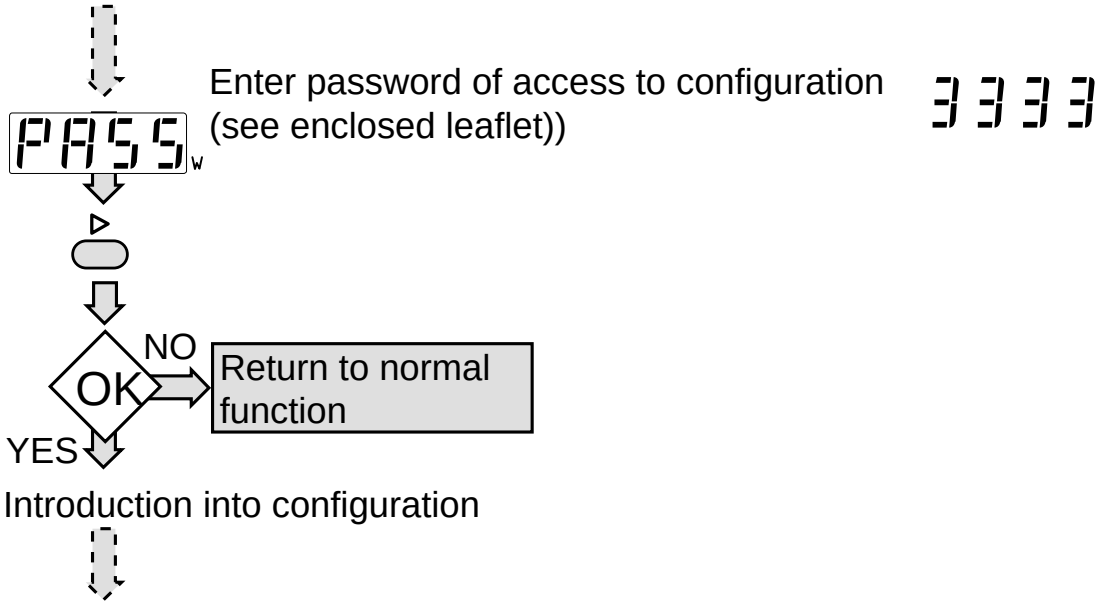

6.2 Password of access to the 3th parameter group 1111

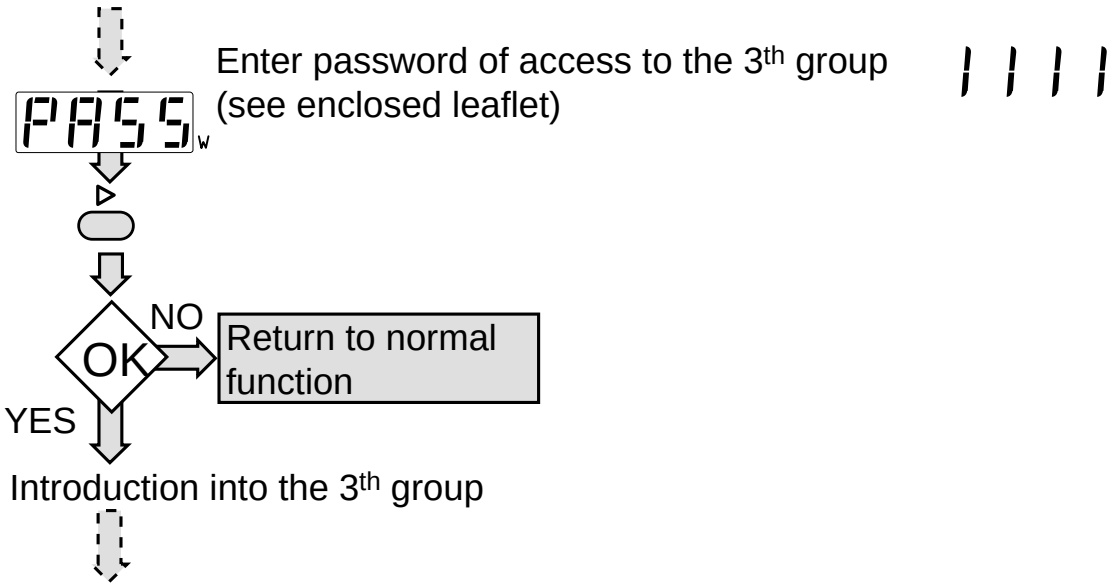

Modifications may be carried out through:

commands from keyboard

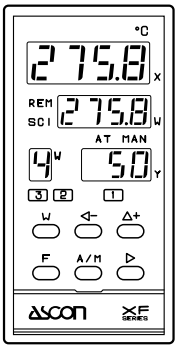

external contacts on logic inputs

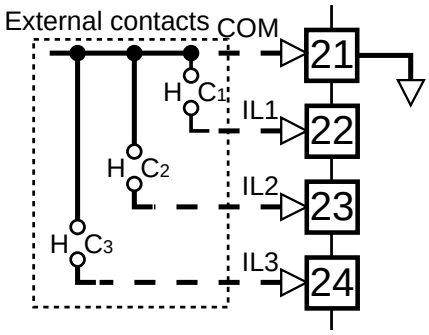

commands via serial

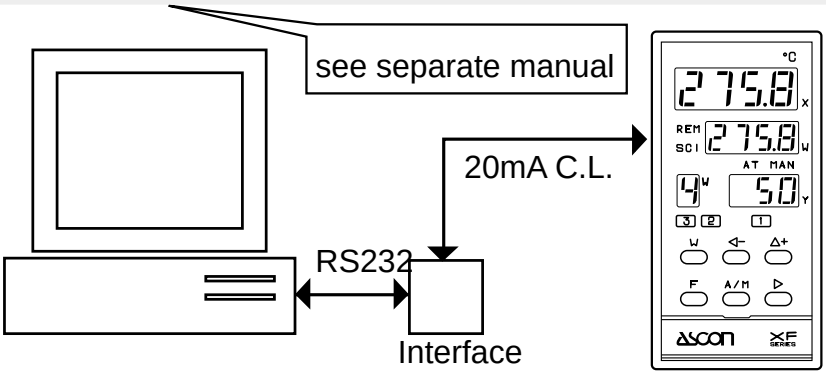

With external contacts on logic inputs IL1, IL2, IL3

Impulsives closing for at least 2 sec., of contacts C1, C2, C3, permits modification of state or of Set point.

IL1	IL2	IL3	Type of modification		
C1	C2	C3	Version with only Local Set poin	Version with Set point (note1) 1 Local + 4 Memorized	Version with Set point 1 Local + 1 Remote
			No action		
ON			No action		Passage from REMOTE to LOCAL
	ON		Passage from AUTOMATIC to MANUAL		
ON	ON		Passage from MANUAL to AUTOMATIC		
		ON	No action	Local Sp. = Memorized Sp. 1	passage Local Sp. to Remote Sp.
ON		ON	No action	Local Sp. = Memorized Sp. 2	__
	ON	ON	No action	Local Sp. = Memorized Sp. 3	__
ON	ON	ON	No action	Local Sp. = Memorized Sp. 4	__

Note 1: Is possible to fix the selected Set point holding closed the relative contacts. While they are closed is possible to make changment from Auto/Man or Man/Auto but it is not possible to change Set point

12 • TECHNICAL DATA

Accuracy (a25°C amb.)	0.2% ± 1 digit (for input with RTD Pt100 and thermocouples)		
	0.1% ± 1 digit (for input in current and voltage)		
Input "X" (configurable)	RTD Pt100	Pt100Ω @ 0°C, (IEC 751)	With configurable scale field
	Thermocouples	J-K-S-R (IEC 584), L (DIN 43710)	
	Continuous current	4..20mA, 0..20mA, Ri 30Ω	
	Continuous voltage	0..1Vdc, 0..10Vdc, Ri 10KΩ	
Auxiliary inputs	3 of logic type (control of operating and Set point states)		
Set point	1 Local + 4 storable		
	Distinct ascent and descent gradient slope	0.1…100.0 digit/min.	
	Higher and lower limit	from beginning to end of scale	
Local/Remote **Set point**	In current	4..20mA, Ri30Ω	Not isolated accuracy: 0.1% at 25°C.
	In voltage	0..10Vdc, Ri 330kΩ	
Control mode	Algorithm	On - Off, PID, FUZZY, PID with I and D excludable actions.	
	Proportional band (P)	0,5..999.9%	
	Integral action time (I)	0.1..100min., excludable	
	Derivative action time (D)	0.01..10min., excludable	
	Cycle time	1..200 sec. (for discontinuous control)	
	Hysteresis	0.1..10% (for on-off control)	
	Dead zone	± 0…5,0% for dual action (heat-cool)	
Auto - Tune	For automatic parameter adjustment (One shot)		
Auto/Man Station	With bumpless action, AUTO/MAN transfer via keyboard, logic input and serial communication.		

Main output Y1 (configurable)	Single or dual, with direct or reverse action			
	Discontinuous	Relay with dual action transitions	2 contacts NA, 5A/250Vac, 2x10 coeff.5	
		Logic	0.18 Vdc, 20mA max. (for static relays)	galvanically isolated
	Continuous	Current	4..20mA(450Ω max.,10 Volts max.)	
		Voltage	0..10Vdc(450Ω min. 20 mA max.)	
	Maximum output		10..100% (1st channel △) -10..-100% (2nd channel ▽)	
Auxiliary outputs Y2 - Y3 (configurable)	Relay		2 contacts NA, 5A/250Vac, 2x10(coeff.5) transitions	
	Action mode		active high (above the set point) active low (below the set point)	
	Hysteresis		0,1..10%	
	Type of Set point		deviation	± 300 steps (with or without inhibited startup)
			band	0..300 steps
			independent	from beginning to end of scale
	Special functions		Loop-Break-Alarm (signal of control loop defect)	
Retransmission output Y4 (option)	Current		4..20mA(450Ω max.,10Vdc max.)	galvanically isolated
	Voltage		0..10Vdc(500Ω min.,20mA max.)	
Serial commnication (option)	Interface 20mA C.L. passive and galvanically isolated (see manual MIU-CS/E) or RS485 port			
Protections	Access to parameters		On three levels for: modification, indication only, no access	
	Immunity to disturbances		level IV, standard IEC 801-4	
	All significant data are stored in a non-volatile memory			
Single power supply	Standard model		100..240V, 48..63Hz, -15% + 10% 250 Vac max	
	Low voltage model		24V, 48..63Hz, -15% + 10% or 24Vdc ± 15%	
	Absorbed power		about 4VA	
Auxiliary power supply	24Vdc ± 10%, 20mA max.		for 2-wire or 3 or 4-wire transmitter	
General features	Isolation group		C according to VDE 0110	
	Climatic group		KWF according to DIN 40040	
	Ambient temperature		0...50°C., humidity 35...85uR%	
	Protection		Front:IP54 standard (IP65 with Kit AXIP65- 1) Cover: IP30, terminal board IP20	
	Material		Self-extinguishing UL94V1	
	Weight		about 480 g.	
	Dimensions		48 x 96, depth 150mm, according to DIN 43700	

GUARANTEE

The equipment is guaranteed free from manufacturing defects for 1 year after installation, for a maximum of 18 months after delivery.
Faults caused by use other than that described in these operating instructions are excluded from the guarantee.

Ascon Tecnologic S.r.l.

via Indipendenza 56, 27029 - Vigevano (PV)

Tel.: +39 0381 69871, Fax: +39 0381 698730